ETL Smart Queue-Less Retail Checkout System Using RFID & Mobile Payment

Submitted in partial fulfilment of the requirements
of the degree of

Bachelor of Engineering

by

Jayraj Dhole: 23106114

Shaunak Das: 23106002

Anushka Khandar: 23106041

Ayush Bhandari: 23106117

Supervisor:
Prof. Adesh Hardas

Department of Computer Science & Engineering
(Artificial Intelligence & Machine Learning)

A. P. SHAH INSTITUTE OF TECHNOLOGY, THANE

UNIVERSITY OF MUMBAI

(2025-2026)

A. P. SHAH INSTITUTE OF TECHNOLOGY

CERTIFICATE

This is to certify that the project entitled **"Smart Queue-Less Retail Checkout System Using RFID & Mobile Payment"** is a bonafide work of **Jayraj Dhole (23106114), Shaunak Das (23106002), Anushka Khandar (23106041), Ayush Bhandari (23106117)** submitted to the University of Mumbai in partial fulfilment of the requirement for the award of the degree of **Bachelor of Engineering** in **Computer Science & Engineering (Artificial Intelligence & Machine Learning)**

Prof. Adesh Hardas
Project Guide

Prof. Yogeshwari Hardas
Project Co-Ordinator

Dr. Jaya Gupta
Head of Department

Dr. Uttam D Kolekar
Principal

A. P. SHAH INSTITUTE OF TECHNOLOGY

Project Report Approval for T. E.

This project report entitled ***Smart Queue-Less Retail Checkout System Using RFID & Mobile Payment*** by ***Jayraj Dhole, Shaunak Das, Anushka Khandar, Ayush Bhandari*** is approved for the degree of ***Bachelor of Engineering*** in **Computer Science & Engineering (Artificial Intelligence & Machine Learning)**, ***2025-26***.

Examiner Name	Signature
1. _____	_____
2. _____	_____

Date:

Place:

Declaration

We declare that this written submission represents my ideas in my own words and where others' ideas or words have been included, I have adequately cited and referenced the original sources. I also declare that I have adhered to all principles of academic honesty and integrity and have not misrepresented or fabricated or falsified any idea/data/fact/source in my submission. I understand that any violation of the above will be cause for disciplinary action by the Institute and can also evoke penal action from the sources which have thus not been properly cited or from whom proper permission has not been taken when needed.

Jayraj Dhole
23106114

Shaunak Das
23106002

Anushka Khandar
23106041

Ayush Bhandari
23106117

Date:

ABSTRACT

Retail checkout systems are key to customer experience and store efficiency, but traditional barcode-based billing often leads to long queues, delays, and weak payment verification. These systems only identify product types, which can result in errors and losses. This project introduces a **Smart Queue-Less Retail Checkout System using RFID and web-based payment**, enabling a seamless "Scan → Pay → Walk Out" experience. Products are equipped with RFID tags, allowing users to scan via a web app, manage a cart, and pay instantly. A backend maps barcodes to RFID UIDs and updates payment status in real time, while an ESP32-based exit reader verifies payments through a FastAPI backend. An AI/ML risk engine further enhances security by detecting unpaid or suspicious transactions.

The system integrates RFID, IoT, and web technologies to eliminate checkout counters, reduce waiting time, and improve inventory tracking. It aligns with **SDG 9 (Industry, Innovation, and Infrastructure)**, **SDG 10 (Reduced Inequalities)**, and **SDG 12 (Responsible Consumption and Production)** by promoting smart retail infrastructure, digital inclusion, and efficient resource management.

Keywords: RFID, Queue-less Checkout, Web Application, IoT, Smart Retail, AI-Based Security.

CONTENTS

1. Introduction 1
   1.1 Background 1
   1.2 Motivation 2
   1.3 Aim & Scope of the Project 2
2. Literature Survey 4
   2.1.RFID-Based Smart Shopping Systems 5
   2.2.Mobile and Web-Based Self-Checkout Systems 6
   2.3.AI-Integrated Smart Shopping Systems 6
   2.4.IoT-Based Smart Cart Systems 7
3. Limitations in Existing Systems 8
4. Problem Statement & Objectives 10
   4.1. Problem Statement 10
   4.2. Objectives 11
5. Proposed System 13
   5.1. System Overview 13
   5.2. System Architecture 15
   5.3. Workflow Modelling Methodology 16
   5.4. Hardware Architecture 18
6. Experimental Setup 20
   6.1. Frontend Setup 20
   6.2. Backend Setup 21
   6.3. Development Environment 23
   6.4. Development Environment 23
7. Results & Discussion 25
   7.1. Functional Validation 25
   7.2. Case Study: Multi-Role System Operation 26
   7.3. Usability & System Behaviour 28

7.4. Limitations 29
8. Conclusion & Future Scope 30
8.1. Conclusion 30
8.2. Future Work 30
References 32

LIST OF FIGURES

Figure 1: Overview of the system flow 14

Figure 2: Overview of the System Architecture 15

Figure 3: Overview of the Hardware Architecture 18

Figure 4: Super Admin Dashboard 26

Figure 5: Store Selection Interface 27

Figure 6: User Barcode Scanning Interface 28

LIST OF TABLES

3.1. Summary of limitations of existing systems 9

ABBREVIATION

AI .....*Artificial Intelligence*

API.....*Application Programming Interface*

ETL.....*Extract, Transform, Load*

IoT .....*Internet of Things*

RFID .....*Radio Frequency Identification*

UID .....*Unique Identifier*

UI.....*User Interface*

ESP32 .....*Wi-Fi Enabled Microcontroller Module*

RC522.....*RFID Reader Module*

Chapter 1

Introduction

1.1 Background

In today's fast-paced retail environment, customer experience and operational efficiency have become key factors influencing business success. With the rapid growth of supermarkets, shopping malls, and large retail chains, the volume of daily transactions has increased significantly. Traditional checkout systems rely on centralized billing counters, manual barcode scanning, and physical verification methods, which often result in long queues, increased waiting time, and inefficient customer flow. These systems require line-of-sight scanning and human intervention, making them both time-consuming and prone to errors.

Additionally, existing security mechanisms such as Electronic Article Surveillance (EAS) systems are limited in functionality, as they only detect the presence of tags rather than verifying whether a product has been paid for. Barcode systems further lack the ability to uniquely identify individual product instances, leading to gaps in inventory tracking and security. As a result, retailers face challenges such as billing delays, inaccurate stock management, and potential losses due to theft or system inefficiencies.

.

With advancements in technologies such as Radio Frequency Identification (RFID), Internet of Things (IoT), and web-based applications, there is a growing opportunity to transform traditional retail systems into smart, automated solutions. RFID enables non-line-of-sight and bulk scanning of items, while web applications provide accessible and platform-independent interfaces for users. By integrating these technologies, it is possible to create a seamless and efficient checkout experience that eliminates the need for traditional billing counters and enhances both speed and accuracy in retail operations.

1.2 Motivation

The increasing demand for faster and more convenient shopping experiences has led to the need for innovative checkout solutions that reduce customer wait times and improve overall efficiency. Long queues at billing counters negatively impact customer satisfaction and limit store throughput, while manual processes increase the chances of errors and inefficiencies. Retailers are also seeking solutions that reduce operational costs and dependency on human resources while maintaining security and accuracy.

Recent trends in digital transformation have encouraged the adoption of contactless systems, cashless payments, and automation in retail environments. Technologies such as RFID and IoT have demonstrated their effectiveness in inventory tracking and automation, while web-based platforms provide flexible and accessible interfaces that do not require dedicated mobile applications. However, most existing systems are limited to individual stores and do not provide a scalable solution that can support multiple retailers within a single platform.

The motivation behind this project is to develop a queue-less checkout system that not only automates billing and payment but also supports multiple stores within a unified platform. By integrating RFID-based detection, web-based payment, real-time backend verification, and an AI/ML-based risk engine, the system aims to provide a secure, efficient, and scalable retail solution. This approach enhances both customer convenience and retailer efficiency while addressing the limitations of existing systems.

1.3 Aim & Scope of the Project

The primary aim of this Third Year Engineering (T.E.) mini project is to design and implement a Smart Queue-Less Retail Checkout System using RFID and Web-Based Payment, enabling customers to scan items, complete payment digitally, and exit the store without traditionalbilling counters.

The system integrates RFID technology, IoT-based hardware (ESP32 and RFID reader), a web-based frontend, and a FastAPI backend for real-time payment verification. It allows automatic detection of products at the exit gate and ensures that only paid items are allowed, improving both efficiency and security.

The scope of the project includes barcode-based item scanning, RFID-based product identification, real-time backend verification, and alert mechanisms for unpaid items. It also incorporates a basic AI/ML-based risk engine to detect anomalies such as suspicious transactions. Additionally, the system is designed to support multiple retail stores within a single platform, enabling scalability and a unified user experience.This project is a prototype-level implementation intended for academic purposes, providing a scalable foundation for future enhancements and real-world applications.

The proposed system aligns with SDG 9 – Industry, Innovation and Infrastructure, SDG 10 – Reduced Inequalities, and SDG 12 – Responsible Consumption and Production by promoting smart retail infrastructure, digital inclusion, and efficient resource management.

Chapter 2

Literature Survey

The rapid advancement of smart retail technologies has led to significant research in automated billing systems, RFID-based product identification, IoT-enabled shopping environments, and AI-driven retail intelligence. Traditional retail systems rely heavily on manual barcode scanning and cashier-assisted billing, which often result in long queues, increased waiting time, and operational inefficiencies. As retail environments continue to expand and customer expectations evolve, there is a growing need for intelligent systems that can automate checkout while ensuring security, scalability, and efficient store operations.

To address these challenges, researchers have explored various approaches involving RFID technology, mobile and web-based applications, IoT-enabled devices, and artificial intelligence. These technologies aim to reduce human intervention, improve transaction speed, and enhance customer convenience. However, most existing systems focus on individual components such as billing automation or user experience, without fully addressing secure payment verification and seamless integration across systems.

To systematically analyze prior research related to the proposed Queue-less Retail Checkout System with Multi-Store Integration, the literature reviewed in this study has been organized into four thematic categories. Each category focuses on a specific technological approach contributing to automated retail checkout systems.

The first category, RFID-Based Smart Shopping Systems, focuses on automatic product detection using RFID. The second category, Mobile and Web-Based Self-Checkout Systems, examines user-driven billing and payment platforms. The third category, AI-Integrated Smart Shopping Systems, explores intelligent systems that enhance customer interaction and decision-making. The fourth category, IoT-Based Smart Cart Systems, discusses embedded systems that enable real-time communication and automation.By organizing the literature into these sections, the review provides a structured understanding of the existing research landscape while highlighting key limitations such as lack of payment verification, dependency on manual interaction, and limited scalability across multiple stores.

2.1 RFID-Based Smart Shopping Systems

RFID technology has emerged as a critical component in automated retail systems due to its ability to identify products without requiring line-of-sight scanning. Unlike barcode systems, RFID enables simultaneous detection of multiple items, significantly improving efficiency and reducing checkout time.

Swadhin Pradhan, Eugene Chai, Karthik Sundaresan, Sampath Rangarajan, and Lili Qiu [1] proposed an RFID-enabled smart shopping cart system (KONARK) that utilizes physical-layer signal analysis techniques such as RSSI, Doppler shift, phase, and read rate. The system applies clustering algorithms to accurately detect items placed inside the cart and track customer interactions with products. It achieves near 100% accuracy in item detection and provides real-time analytics for customer behavior and product interaction.

Despite its high accuracy and advanced capabilities, the system requires complex signal processing and specialized infrastructure, increasing deployment cost and implementation complexity. Additionally, it focuses primarily on product detection and analytics, without incorporating a mechanism to verify payment status at the exit stage, which limits its effectiveness in preventing unauthorized item removal.

2.2 Mobile and Web-Based Self-Checkout Systems

Mobile and web-based self-checkout systems are designed to enhance customer convenience by allowing users to scan and pay for products independently using digital platforms. These systems reduce dependency on cashier-based billing and help eliminate long queues at checkout counters.

T. Subanachiar, M. Arunachalam, P. R. Hemalatha, and J. V. Anchitaalagammai [2] proposed a mobile-based self-checkout system that integrates barcode scanning with digital payment solutions. The system enables customers to perform self-billing and complete transactions using smartphones, thereby improving efficiency and supporting a fully digital shopping environment.

However, barcode-based systems rely heavily on manual scanning and require line-of-sight interaction, making them prone to human error and misuse. Furthermore, these systems lack automated verification at the exit stage, making it difficult to ensure that all items have been properly billed. This limitation creates potential security risks and restricts their applicability in fully automated retail environments.

2.3 AI-Integrated Smart Shopping Systems

Artificial Intelligence has been increasingly adopted in retail systems to enhance user experience, improve operational efficiency, and provide intelligent insights. AI-based systems enable features such as product recommendations, customer behavior analysis, and personalized shopping assistance.

S. Kothavale, S. Pawar, S. Kankarej, S. Patil, and R. Raut [3] proposed an AI-integrated smart shopping system that combines RFID-based billing with features such as product recommendation, indoor navigation, voice-based assistance, and real-time cart monitoring. The system improves customer engagement and enhances shopping efficiency through intelligent automation and personalized services.

Despite these advantages, the system primarily focuses on enhancing user interaction rather than ensuring secure checkout processes. It lacks a robust mechanism for verifying payment status at the exit stage and does not effectively address fraud detection. Additionally, the integration of multiple AI components increases system complexity, computational requirements, and implementation cost.

2.4 IoT-Based Smart Cart Systems

IoT-based retail systems integrate hardware components such as sensors, microcontrollers, and communication modules to enable real-time data exchange and automation. These systems aim to connect physical devices with backend systems for efficient monitoring and control.

G. Elumalai, M. D. Manigandan, D. Selvaraj, and U. Maheswaran [4] proposed an IoT-based smart shopping cart system using an Arduino Nano, RFID sensors, and a Wi-Fi communication module. The system automatically detects products, displays item details on an LCD, and supports digital payment integration through UPI. It eliminates the need for traditional billing counters and enables real-time communication with the store server.

Despite its benefits, the system faces challenges related to network dependency, scalability, and data security. Moreover, it focuses mainly on billing automation and does not include a reliable mechanism for verifying payment status during product exit, which limits its effectiveness in ensuring secure transactions.

Chapter 3

Limitations in Existing Systems

The domain of smart retail systems and automated checkout technologies has evolved significantly in recent years, driven by the need for faster transactions, improved customer experience, and efficient store operations. Various approaches such as RFID-based systems, mobile self-checkout applications, IoT-enabled smart carts, and AI-driven retail solutions have been developed to reduce manual effort and enhance automation. However, despite these advancements, existing systems still face several limitations that restrict their effectiveness, scalability, and reliability in real-world retail environments.

One of the primary limitations of traditional retail systems is their dependence on barcode-based scanning. Barcode systems require line-of-sight interaction and manual effort, which increases billing time and introduces the possibility of human errors such as missed scans or incorrect item identification. Even mobile and web-based self-checkout systems rely on manual scanning, making them prone to misuse or incomplete billing. Additionally, these systems lack automated verification at the exit stage, making it difficult to ensure that all items have been properly paid for.

RFID-based and IoT-enabled systems improve efficiency by enabling automatic detection of products and real-time communication between devices. However, most implementations focus primarily on item identification and billing automation without incorporating reliable payment verification mechanisms.

.

Table 3.1: Summary of limitations of existing systems

Title	Conference / Journal Details	Key Points	Improvements Proposed	Citation
Konark: A RFID Based System for Enhancing In-store Shopping Experience	ACM Workshop on Physical Analytics, 2017	RFID-based smart cart using signal analysis (RSSI, Doppler, Phase, Read Rate); detects items and customer interaction with high accuracy	Integrate RFID detection with backend payment verification to ensure secure checkout at exit stage	[1]
Mobile-Based Self-Checkout and Digital Payment System	Journal Article (EBSCO), 2022	Enables self-checkout using barcode scanning and digital payment; reduces queues and cashier dependency	Replace manual barcode scanning with RFID-based automatic detection and add real-time verification system	[2]
AI-Integrated Smart Shopping System using RFID and IoT	IEEE Conference, 2021	Combines RFID billing with AI-based recommendation, navigation, and real-time cart monitoring	Incorporate AI-based risk detection with payment verification to improve security and fraud detection	[3]
IoT-Based Smart Shopping Cart using RFID and Wi-Fi	IEEE Conference, 2023	Uses RFID sensors and IoT modules for automated billing and real-time server communication	Implement robust backend validation and RFID-based exit verification to ensure all items are paid	[4]

Chapter 4

Problem Statement & Objectives

4.1 Problem Statement

Modern retail systems are evolving rapidly with the increasing demand for faster, contactless, and efficient shopping experiences. However, traditional checkout mechanisms still rely heavily on centralized billing counters, manual barcode scanning, and cashier-assisted operations. These approaches often lead to long queues, increased waiting time, and reduced customer satisfaction, particularly during peak hours. Additionally, manual processes increase the likelihood of billing errors and inefficiencies in store operations.

Barcode-based systems, which are widely used in retail environments, require line-of-sight scanning and identify only the product type rather than individual product instances. This limitation affects inventory accuracy and prevents item-level tracking. Existing security mechanisms such as Electronic Article Surveillance systems are also insufficient, as they detect only the presence of tags and do not verify whether a product has been paid for. As a result, retail stores face challenges related to theft prevention and transaction validation.

Although several automated solutions have been developed using RFID, mobile applications, and IoT technologies, most of these systems focus primarily on billing automation and customer convenience. They lack a reliable mechanism for real-time payment verification at the exit stage. In addition, many systems depend on manual user actions such as scanning each item, which introduces the possibility of human error, missed scans, or intentional misuse.

Another significant limitation is that most existing solutions are designed for single-store environments. Each retail store operates independently with its own billing system, which limits scalability and prevents the creation of a unified platform. Customers are required to use different systems for different stores, leading to inconsistency in user experience and lack of integration across retail chains.Furthermore, modern retail environments generate large volumes of transactional data from product scans, payments, and inventory updates. However, existing systems do not effectively implement structured data processing and synchronization mechanisms to handle this information in real time. This results in delays, inconsistencies, and reduced reliability in transaction validation.

Therefore, there is a need for a system that eliminates traditional checkout processes, enables real-time verification of payment status, ensures secure and accurate transactions, and supports multiple stores within a unified platform. The system should integrate RFID-based product detection, web-based payment, backend validation, and intelligent risk analysis to provide a scalable, efficient, and queue-less retail checkout solution.

4.2 Objectives

The main objective of this project is to design and develop an ETL Smart Queue-Less Retail Checkout System using RFID and web-based payment, which enables customers to complete shopping without traditional billing counters while ensuring secure and real-time transaction verification.The specific objectives of the project are as follows:

- To design a queue-less checkout system that eliminates the need for centralized billing counters and reduces customer waiting time.
- To implement RFID-based product identification for fast and non-line-of-sight detection of items at the exit stage.
- To develop a web-based application that allows customers to scan products, manage their cart, and complete payments digitally.
- To establish a backend system that performs real-time verification of RFID-tagged products by checking their payment status in the database.

- To design and implement a system that supports multiple retail stores within a unified platform, ensuring scalability and consistent user experience.

Chapter 5

Proposed System

5.1 System Overview

The proposed system is a web-based ETL Smart Queue-Less Retail Checkout System designed to enable users to perform seamless shopping through a scan, pay, and walk-out workflow. The system integrates web technologies, backend processing, database management, and RFID-based hardware components to provide an automated and efficient retail checkout experience. The overall operational flow of the system follows a user-driven retail interaction model integrated with real-time backend validation and RFID-based verification. The Fig. 1 illustrates the flow of the system describing how the system works and the tasks the system can perform.

The workflow begins with user authentication, where the user logs into the system using a secure login interface. Based on the assigned role, such as super admin, admin, or customer, the user is redirected to the appropriate dashboard. The super admin is responsible for managing multiple stores, creating store entries, and maintaining administrative control over the system. The admin manages store-specific operations such as product addition, inventory monitoring, and sales analytics.

.

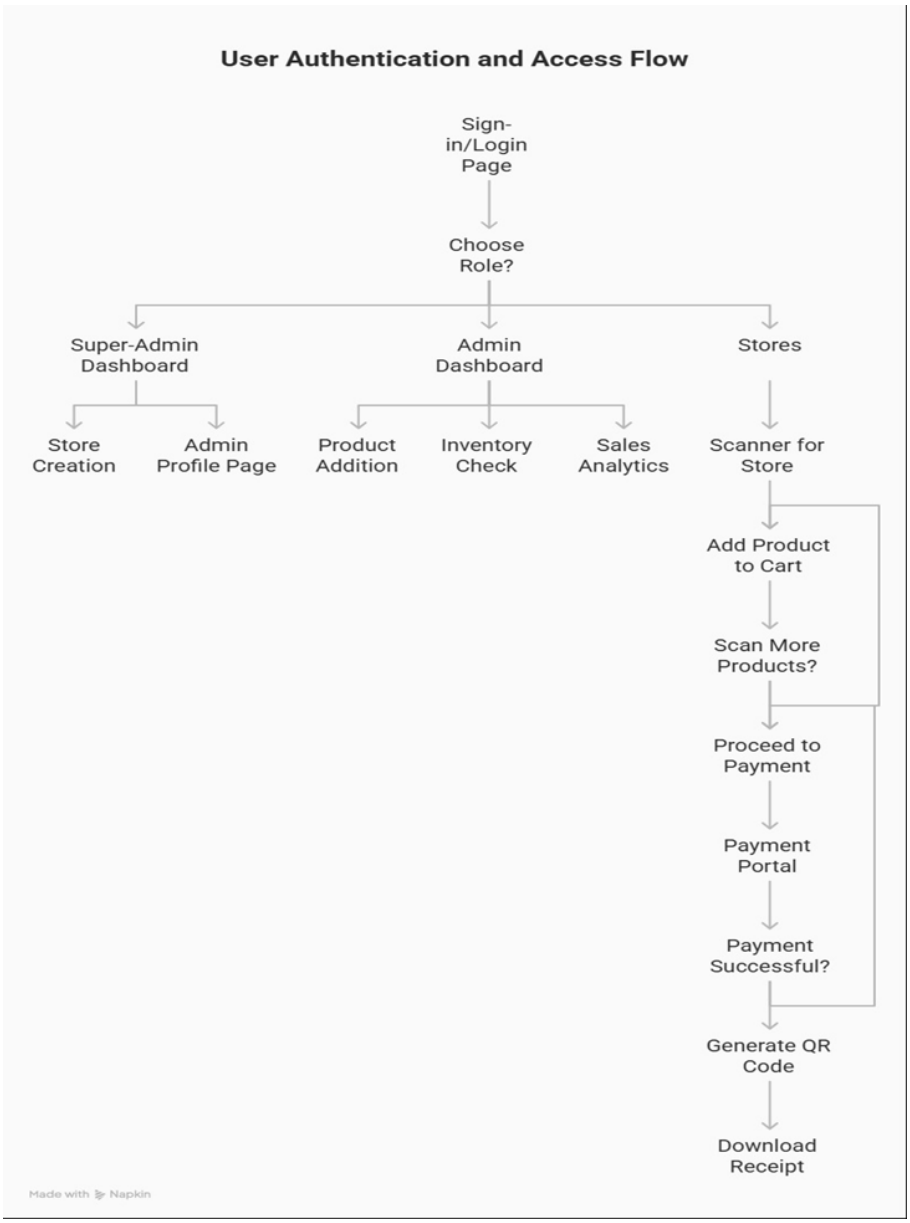

Figure 1: Overview of the system flow

The user then scans product barcodes using the web application, and the corresponding product details are fetched from the database and added to the cart in real time. The cart is dynamically updated as items are added or removed, ensuring accurate tracking of selected products.Once the user completes product selection, they proceed to the payment stage, where transactions are securely processed through an integrated payment gateway. Upon successful payment, the backend updates the payment status of all items and generates a confirmation, along with a QR code and digital receipt for the transaction. This confirmation serves as proof of purchase and is used for verification at the exit stage.

At the exit stage, the RFID reader scans all items carried by the user. The scanned RFID data is transmitted to the backend server through the ESP32 microcontroller. The backend verifies whether all items are marked as paid in the database. If all items are verified

successfully, the system allows the user to exit without interruption. If any unpaid item is detected, the system triggers an alert using the buzzer or LED.

The overall system flow can be summarized as: User → Login → Select Role → Choose Store → Scan Products → Add to Cart → Payment → RFID Verification → Exit.This approach ensures a seamless, automated, and secure checkout experience while reducing manual effort, minimizing billing errors, and improving customer satisfaction across multiple retail environments.

5.2 System Architecture

The system architecture defines the structural organization of the proposed system and illustrates how different components interact with each other to achieve seamless functionality. The Fig. 2 describes the overall structure of the system, including the user layer, application layer, data layer, payment layer, and IoT layer, providing a clear representation of system hierarchy and communication flow.

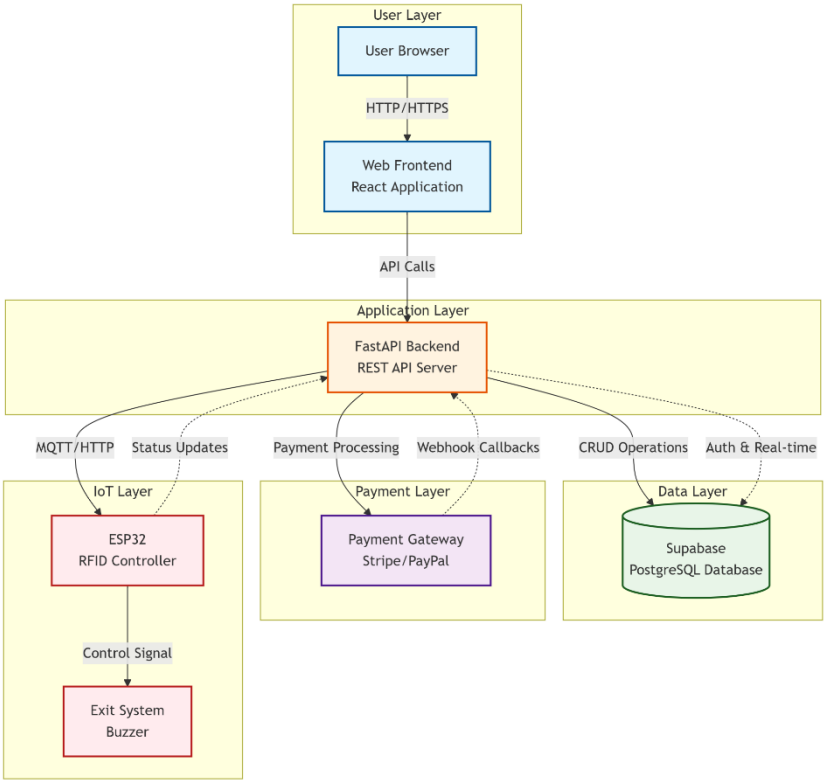

Figure 2 : Overview of the System Architecture

The user layer consists of the user browser, which acts as the interface between the user and the system. Users access the platform through a web browser, where the frontend application, developed using React, provides an interactive and user-friendly interface. The

frontend communicates with the backend using HTTP/HTTPS protocols and sends API requests for authentication, product scanning, cart operations, and payment processing.

The application layer is implemented using a FastAPI-based backend server, which serves as the core processing unit of the system. It handles all business logic, including request processing, authentication, cart management, product validation, and RFID verification. The backend also ensures proper coordination between different system components and maintains consistency of data across the system. Additionally, it manages API endpoints and processes real-time requests from both the frontend and hardware modules.

The data layer consists of a centralized PostgreSQL database managed through Supabase. This database stores all essential data, including user profiles, store information, product details, RFID mappings, cart data, and transaction records. The backend performs CRUD operations on the database and ensures real-time synchronization, enabling accurate and consistent data management across multiple stores.The payment layer integrates with a secure payment gateway such as Razorpay to facilitate digital transactions. The backend communicates with the payment gateway to create payment orders and verify transaction status using webhook callbacks. This ensures secure, reliable, and real-time payment processing within the system.The IoT layer consists of the ESP32 microcontroller connected to the RFID reader and output devices such as a buzzer or LED. The ESP32 acts as a communication bridge between the hardware and backend server. It sends RFID tag data to the backend using HTTP or MQTT protocols and receives verification responses. Based on the response, the ESP32 controls the output devices to allow exit or trigger an alert.

This layered architecture ensures modularity, scalability, and efficient communication between system components. It also supports multi-store functionality by allowing different stores to operate independently while sharing a centralized infrastructure, thereby improving system flexibility and performance.

5.3 Workflow Modelling Methodology

The proposed system follows a structured workflow methodology that ensures accurate data processing, secure transaction validation, and seamless integration between software and hardware components. The methodology is designed to maintain logical execution flow, data consistency, and system reliability across all operations.

5.3.1 Process Flow Representation

The system workflow is represented as a sequence of interconnected operations starting from product scanning to exit verification. Each step in the workflow depends on the successful completion of the previous step, ensuring logical execution and preventing inconsistencies in the checkout process.

The process begins with product scanning through the web application. The scanned product data is sent to the backend, where it is validated against the database and added to the user's cart. The system maintains real-time synchronization between the frontend and backend, ensuring that cart updates are reflected instantly. This real-time interaction improves system responsiveness and enhances user experience.

5.3.2 Data Processing Model (ETL Approach)

The system follows an ETL-based data processing model, ensuring structured handling of data throughout the checkout process:

- Extract – Product data is captured through barcode scanning and user interaction
- Transform – Payment validation, data verification, and status updates are performe
- Load – Updated product and transaction data are stored in the database

This structured approach ensures data integrity, consistency, and real-time synchronization across all system components. It also allows efficient tracking of transactions and simplifies backend processing.

5.3.3 Payment and Verification Workflow

Once the user proceeds to payment, the system creates a payment order through the integrated payment gateway. The user completes the transaction using available digital payment methods. After successful payment, the backend verifies the transaction and updates the payment status of all selected products in the database.

At the exit stage, RFID tags attached to products are scanned by the RFID reader. The scanned data is transmitted to the backend, where each item is verified against the payment records. This verification ensures that only paid items are allowed to exit, thereby preventing unauthorized product removal and enhancing system security.

5.3.4 Multi-Store System Handling

The system is designed to support multiple retail stores within a single unified platform. Each store maintains its own product inventory, administrative controls, and transaction data while sharing a centralized backend and database infrastructure.

This multi-store capability enhances scalability and allows the system to be deployed across different retail environments. Users can select any store within the platform and perform checkout operations using the same interface, ensuring consistency and ease of use. Additionally, this approach enables efficient resource utilization and simplifies system management for large-scale implementations.

5.4 Hardware Architecture

The hardware architecture of the proposed system is designed to enable RFID-based verification at the exit stage. The Fig. 3 illustrates the hardware connections between the ESP32 microcontroller, RC522 RFID reader, and output components such as the buzzer.

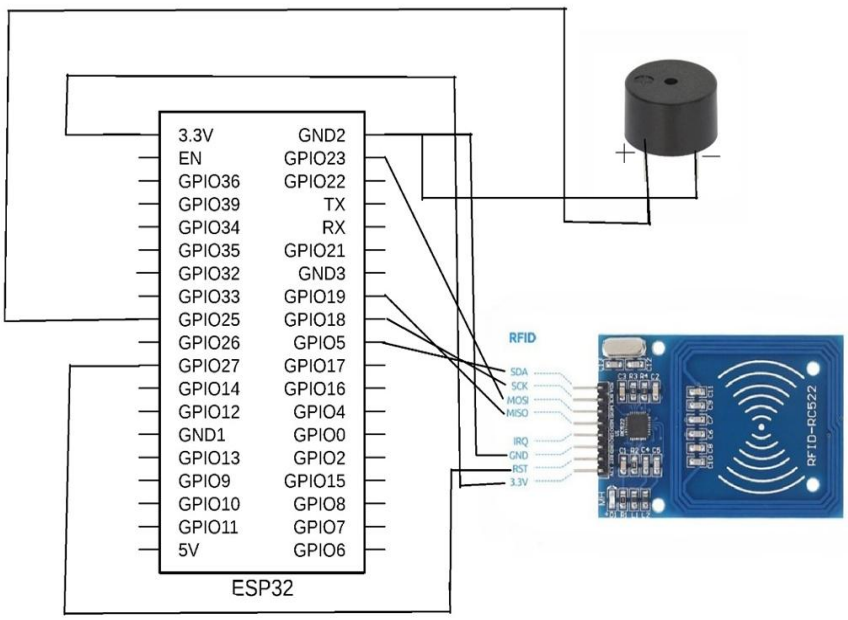

Figure 3: Overview of the Hardware Architecture

The ESP32 microcontroller acts as the central processing unit of the hardware module. It is responsible for interfacing with the RFID reader, processing scanned data, and communicating with the backend server over a Wi-Fi network. The RC522 RFID reader is connected to the ESP32 using the SPI communication protocol, where pins such as SDA, SCK, MOSI, MISO, RST, and GND are used for data transmission.

Each product in the store is tagged with a unique RFID tag containing a distinct identifier. When a customer reaches the exit point, the RFID reader scans all items, and the ESP32 collects the corresponding UID values. These values are then transmitted to the backend server through API requests for verification.The backend checks whether the scanned RFID tags correspond to products marked as “PAID” in the database. Based on the verification result, the ESP32 controls the output device. If all items are verified successfully, the system allows exit. If any unpaid item is detected, the buzzer is activated to generate an alert signal.

This hardware setup enables real-time product verification and ensures secure checkout without manual intervention. It also provides a reliable interface between the physical retail environment and the digital system, enhancing overall system efficiency and security.

Chapter 6

Experimental Setup

6.1 Frontend Setup

The frontend of the ETL Smart Queue-Less Retail Checkout System is developed using React along with TypeScript, providing a structured and type-safe environment for building the user interface. The application is built and served using Vite, which enables fast development, hot module replacement, and optimized production builds.

The user interface is designed to support a scan-and-pay retail checkout workflow, where users can scan product barcodes, manage their shopping cart, and complete payments through an integrated web-based interface. The frontend is responsible for handling user interactions, cart management, payment initiation, and communication with backend services through API calls. Additionally, the system is designed to support multiple stores within a single platform, allowing users to select and interact with different retail environments seamlessly.

6.1.1 Frontend Technologies Used

- **React** – Component-based user interface development
- **TypeScript** – Ensures type safety and improves code reliability
- **Vite** – Development server and build tool for fast performance
- **React Router** – Handles client-side routing between pages
- **shadcn/ui** – UI component library based on Radix and Tailwind CSS
- **Supabase** – Used for authentication and database connectivity
- **Vitest** – Testing framework for frontend modules
- **React Testing Library** – Utilities for testing UI components

6.1.2 Frontend Structure

The frontend follows a modular and scalable architecture consisting of:

- **UI Components** – Reusable interface elements built using shadcn/u
- **State Management** – Context-based providers for authentication and cart handlin
- **Page Modules** – Routing-based pages such as Home, Scanner, Cart, and Paymen
- **Custom Hooks** – Reusable logic modules such as useAuth and useCar
- **Integration Layer** – Supabase client configuration and API communication
- **Utility Modules** – Helper functions for data handling and styling

This modular structure ensures efficient communication between the frontend and backend while maintaining scalability, maintainability, and clean separation of concerns.

6.2 Backend Setup

The backend of the system is developed using Supabase with PostgreSQL and Edge Functions, providing a scalable and serverless environment for handling application logic and data operations. The backend is responsible for user authentication, product management, cart handling, payment processing, RFID verification, and multi-store data management.

The system follows an ETL-like approach where product and transaction data are collected, processed, validated, and stored for real-time decision-making. This ensures accurate synchronization between scanned products, payment status, and exit verification.

6.2.1 Backend Technologies Used

- **Supabase** – Backend-as-a-Service platform
- **PostgreSQL** – Relational database for storing application data
- **Deno** – Runtime environment for Edge Functions
- **Python 3.11+** – Used for RFID service implementation
- **FastAPI** – Framework for building RFID verification APIs
- **SQLAlchemy** – ORM for database interaction
- **Razorpay** – Payment gateway integration for digital transactions

6.2.2 Backend Structure

The backend is organized into multiple layers to ensure modularity and maintainability:

- **Database Layer** – Stores data related to users, stores, products, RFID tags, carts, and transactions
- **Edge Functions** – Handles payment order creation, verification, and RFID gate validation
- **RFID Service** – Verifies scanned RFID tags against payment status using FastAPI
- **Authentication Module** – Manages user roles such as super admin, admin, and user
- **Payment Module** – Integrates Razorpay for secure payment processing

This structure ensures clear separation of responsibilities and efficient handling of system operations.

6.2.3 API Communication

The backend exposes RESTful API endpoints for:

- User authentication and profile management
- Store selection and multi-store operations
- Product scanning and cart management
- Payment order creation and verification
- RFID-based exit verification

These APIs enable seamless communication between the frontend, backend, and hardware components, ensuring real-time synchronization of data across the system.

6.3 Hardware Setup

The hardware component of the system is designed to perform RFID-based verification at the exit stage. It consists of an ESP32 microcontroller connected to an RC522 RFID reader and alert mechanisms such as a buzzer or LED.

The ESP32 acts as a communication bridge between the RFID reader and the backend server. It scans RFID tags of products and sends the corresponding UID data to the backend via Wi-Fi for verification.

6.3.1 Hardware Components Used

- **ESP32 Microcontroller** – Controls hardware operations and handles network communication
- **RC522 RFID Reader** – Reads RFID tags attached to products
- **RFID Tags** – Unique identifiers assigned to each product
- **Buzzer** – Provides alert signals for success or failure
- **Power Supply** – Provides required power to the hardware setup

6.3.2 Hardware Working

When a customer exits the store, the RFID reader scans all items carried by the user. The ESP32 sends the scanned RFID UIDs to the backend system through an API request. The backend verifies whether each item is marked as "PAID" in the database.

- If all items are verified → Exit is allowed
- If any item is unpaid → Alert is triggered using buzzer/LED

This ensures secure and automated checkout verification without manual intervention.

6.4 Development Environment

The development of the system was carried out using a combination of modern tools and frameworks to ensure efficient implementation, testing, and deployment.

6.4.1 Development Tools

- Operating System – Windows / Linux
- Code Editor – Visual Studio Code (VS Code)
- Version Control – Git and GitHub
- Web Browser – Google Chrome

6.4.2 Software Requirements

- **Node.js 18+** – Required for frontend development
- **npm –** Package manager for frontend dependencies
- **Python 3.11+** – Required for backend RFID services
- **pip** – Python package manager

6.4.3 Development Setup

The frontend runs on the Vite development server (typically localhost), while Supabase handles backend services and database operations. The RFID service is executed using FastAPI with Uvicorn. This setup ensures smooth integration between frontend, backend, and hardware components, enabling efficient testing and execution of the system.

Chapter 7

Results & Discussion

7.1 Functional Validation

To evaluate the performance and functionality of the proposed ETL Smart Queue-Less Retail Checkout System, multiple test scenarios were conducted across different user roles including super admin, store-level interaction, and end-user operations. The system was tested for role-based access control, product scanning, cart handling, payment processing, and RFID-based verification. The results demonstrate that the system performs reliably across all modules and ensures seamless interaction between frontend, backend, and hardware components.

The role-based architecture was successfully validated, where each user type was granted access only to their respective functionalities. The system maintained proper synchronization between all components, ensuring accurate data flow and real-time updates. These results confirm that the system is capable of handling multi-store operations efficiently while maintaining secure and structured access control.

.

7.2 Case Study: Multi-Role System Operation

7.2.1 Super Admin Module

The super admin module was tested to verify its ability to manage multiple stores within the platform. As shown in Fig. 4, the super admin dashboard provides an interface for creating new stores by entering details such as store name, address, and description. The system successfully stores the created store data in the database and allows centralized control over store management.

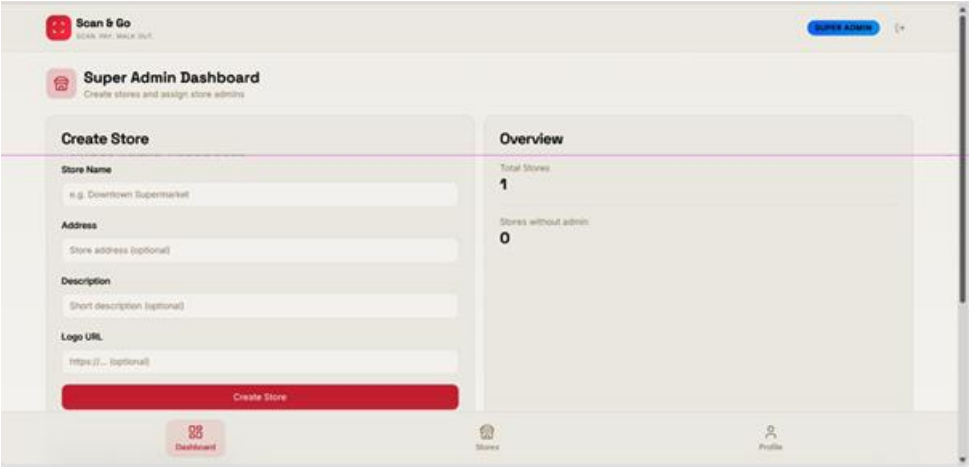

Figure 4: Super Admin Dashboard

The dashboard also displays an overview of total stores and administrative status, enabling efficient monitoring and control. The results indicate that the super admin can manage multiple stores and assign roles without affecting system performance. This validates the scalability and centralized management capability of the system.

7.2.2 Store Selection Module

The store selection interface allows users to choose the store from which they want to shop. As illustrated in Fig. 5, the system dynamically displays available stores, and the user selects a store before starting the scanning process. The selected store is linked to the user session, ensuring that all scanned products and transactions are associated with the correct store.

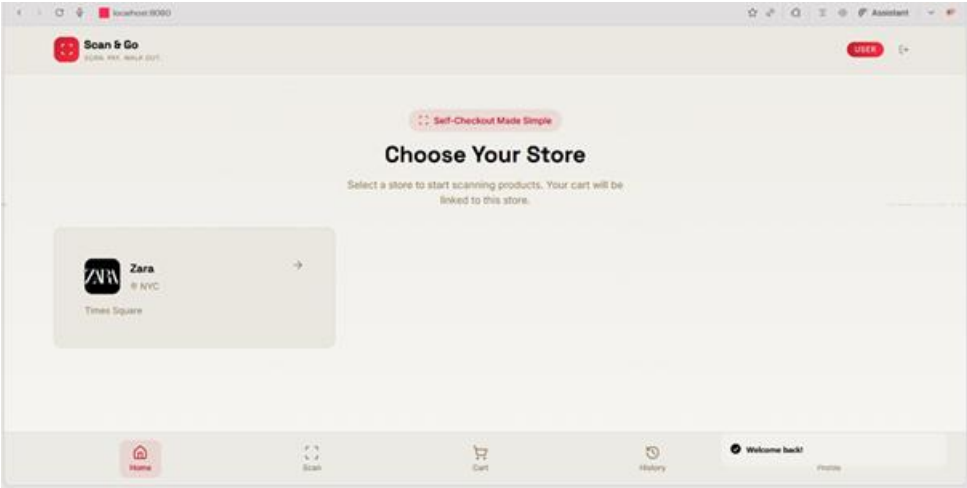

Figure 5: Store Selection Interface

The system successfully handled store-specific data mapping, maintaining accurate linkage between products, carts, and transactions. This demonstrates that the system can support multiple stores within a single platform while ensuring data consistency and isolation between stores.

7.2.3 User Scanning Module

The user scanning module was tested using the camera-based barcode scanning interface shown in Fig. 6. The system successfully captures barcode data and retrieves corresponding product details from the backend database. The scanned products are added to the cart in real time, and the cart updates dynamically as items are scanned.

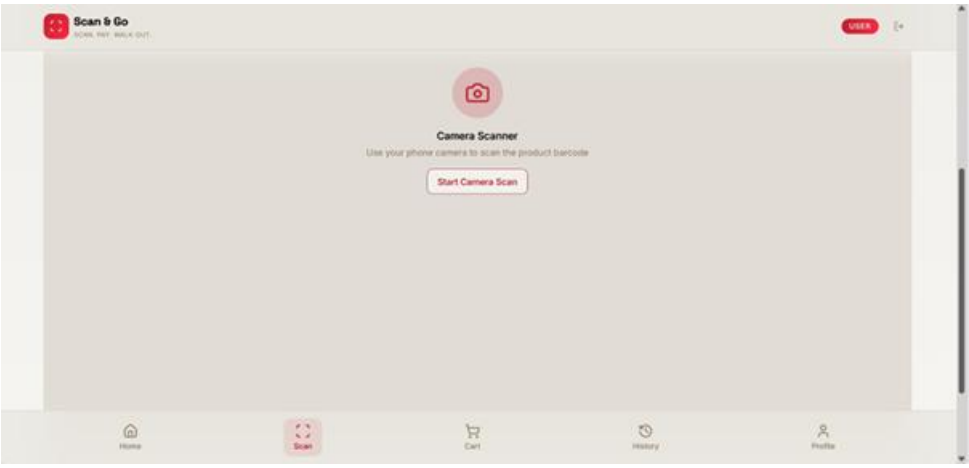

Figure 6: Product Scanning Interface

The scanning process is responsive and efficient, allowing users to quickly add products without manual input. The integration with backend services ensures accurate retrieval of

product details such as price and availability. This confirms that the system provides a smooth and user-friendly shopping experience.

7.3 Usability & System Behaviour

The usability evaluation of the system indicates that the web-based interface is intuitive, responsive, and easy to use. The role-based design ensures that users are presented with only relevant functionalities, reducing complexity and improving usability. The super admin dashboard (Fig. 4), store selection interface (Fig. 5), and scanning interface (Fig. 6) collectively provide a seamless and structured user experience.

The system demonstrates efficient real-time synchronization between frontend, backend, and database components. Updates related to store data, product selection, cart operations, and payment status are reflected instantly across the system. The integration of barcode scanning with RFID-based verification further enhances system reliability and ensures secure transaction validation.

Additionally, the system supports multi-store operations effectively, allowing users to switch between stores and perform checkout operations without disruption. The overall system behavior confirms its capability to handle real-time operations efficiently while maintaining consistency and performance.

7.4 Limitations

Despite the successful implementation and testing of the system, certain limitations were identified. The barcode scanning functionality depends on camera quality and lighting conditions, which may affect scanning accuracy in some scenarios. Additionally, the system requires stable internet connectivity for communication between frontend, backend, and hardware components.

The multi-store system, while scalable, may require further optimization for large-scale deployments involving a high number of concurrent users and stores. The current implementation of the risk detection mechanism is basic and can be enhanced using advanced AI techniques for better fraud detection.

Furthermore, the RFID hardware system depends on tag placement and reader range, which may affect detection accuracy in certain conditions. Integration with existing retail systems may also require additional customization.

.

Chapter 8

Conclusion & Future Scope

8.1 Conclusion

The ETL Smart Queue-Less Retail Checkout System using RFID and web-based payment offers a practical and scalable solution to the limitations of traditional retail billing. By combining web technologies, backend processing, database management, and RFID-enabled hardware, the system delivers a smooth "scan, pay, and walk-out" shopping experience that reduces friction for both customers and store operations.

The system performs reliably across key functions such as product scanning, cart management, payment processing, and RFID-based exit verification. RFID eliminates the need for manual barcode scanning at checkout, significantly reducing wait times and human dependency. The backend maintains accurate synchronization between scanned items and their payment status, ensuring secure, real-time transaction validation. Additionally, the ETL-style data flow ensures structured handling of information from input to transformation and final verification.

A major strength of the system lies in its support for multi-store functionality within a unified platform, allowing independent store operations over shared infrastructure for better scalability and flexibility. Overall, the solution enhances operational efficiency, improves customer convenience, minimizes queues, and introduces a secure, technology-driven approach to modern retail checkout systems.

8.2 Future Scope

While the system demonstrates strong performance and usability, several enhancements can further improve its scalability and capabilities. Integrating advanced AI and machine learning for fraud detection and behavioral analysis would strengthen security by identifying suspicious activities more accurately. Expanding support to mobile applications alongside the web platform can offer greater flexibility, along with features like purchase history, recommendations, and loyalty programs. Cloud-based analytics can also provide valuable insights into customer behavior, inventory trends, and sales performance.

Hardware upgrades, such as advanced RFID systems with improved range and accuracy, can enhance reliability. For large-scale retail environments, adopting distributed architectures, load balancing, and high-performance backend services would ensure efficient handling of high user and transaction volumes. Additionally, integrating with existing retail systems like inventory and billing software can ease real-world adoption, while improved multi-store-dashboards can enable better centralized monitoring and control, helping the system evolve into a scalable and industry ready solution

References

[1] S. Pradhan, E. Chai, K. Sundaresan, S. Rangarajan, and L. Qiu, “KONARK: RFID-Based Customized Smart Shopping Cart Using Physical Layer Analysis,”in Proc. ACM Workshop on Physical Analytics, 2017.

[2] T. Subanachiar, M. Arunachalam, P. R. Hemalatha, and J. V. Anchitaalagammai, “Design and Implementation of Mobile Self-Checkout System Using Barcode Scanning,” *Global Journal of Engineering and Technology (GIJET)*, 2022.

[3] G. Elumalai, M. D. Manigandan, D. Selvaraj, and U. Maheswaran, “An IoT-Based Arduino Nano Driven Smart Shopping Cart in *Proc. IEEE Conference*, 2023.

[4] S. Kothavale, S. Pawar, S. Kankarej, S. Patil, and R. Raut, “AI-Integrated Smart Shopping Cart with Indoor Navigation and Recommendation System,”in *Proc. IEEE Conference*, 2021.

[5] M. K. Naji, A. D. Farhood, H. F. Fahad, and A. H. Ali, "A radio frequency identification based smart shopping trolley system for automated billing," Bulletin of Electrical Engineering and Informatics, vol. 12, no. 5, pp. 2713-2721, Oct. 2023.

[6] T. Subanachiar, S. Nuchitprasitchai, and Y. Nilsiam, "Smart Application to Enhance In-Store Shopping," Global Journal of Engineering and Technology (GIJET), 2022.

[7] G. Elumalai, S. Yuvaraj, R. Ramadevi, V. M. Nisha, R. Ramalakshmi, and V. S. Kumar, "IoT Based Arduino-Nano Smart Shopping Cart for Automated Billing System," in 2023 14th International Conference on Computing Communication and Networking Technologies (ICCCNT), Delhi, India, 2023, pp. 1-6.

[8] S. Kothavale, S. Shinde, P. Shejwal, and P. Yadav, "Queue-less Billing Shopping Assistant Using AI," Journal of Artificial Intelligence and Machine Learning (AIMV), vol. 3, no. 2, pp. 45-52, 2021.

[9] "DEVELOPING SMART CART SYSTEM USING NODEMCU AND RFID FOR CASHIERLESS STORE," President University Institutional Repository, 2023.